MP SENSOR

ELECTRONIC PRESSURE & VACUUM SWITCH *Product category*

NANO *Type*

STANDARD *Style*
-1…0 | -1…1 | -1…10 |0…10 | 0…12 BAR

DATA SHEET | *ENGLISH*

CE IO-Link

General data

Display	Digital display
Switching status display	1x LED each output
Setting options	Switch points; NO/NC; Hysteresis / window mode; diagnostic mode; Pressure unit
Operating medium	Filtered, dry or oiled air and non-corrosive gases
Protection class	IP65
MTTF (40°C)	319 years

Ordering information

1 - 06 - XX XX - XX 3 X XX

Process connection

G1/8“ inside	08

Electrical Connection

M8	01

Output signal

2x PNP	03
2x NPN	04

Firmware

Standard	00
Customized	>00

Pressure range

-1…0	1
-1…1	2
-1…10	3
0…10	4
0…12	5

Mechanical data

Material housing	Anodized aluminum / Plastic ABS
Process connection	G1/8“ inside
Material process connection	Anodized aluminum
Mounting position	Any (port downwards when using oiled air)
Weight	32 g

Electrical data

Electrical connection	M8x1, 4-pole; M12x1, 4-pole
Operating voltage	10,8…30 VDC
Current consumption	< 15 mA / < 3 mA power saving mode
Short-circuit / reverse polarity protection	yes / yes

Output

Output signal (IO-Link is optionally available)	2x PNP; 2x NPN
Max. output current	max. 250 mA each output
Output function	NO / NC (programmable)
Operating frequency	200 Hz
Response time	< 2,8 ms
Accuracy	± 2% FS

Pressure range

Measuring range (bar)	-1…0	-1…1	-1…10	0…10	0…12
max. overpressure (bar)*	2		15		

IO-Link

IO-Link specification	Version 1.1
Frame type	2.2
Transmission physics	3-conductor physics (PHY2)
Transmission rate	COM 2 / 38,4 Kbit/s
Process data width	24 bit
Measurement information	16 bit
Switch point information	2 bit
Max. cycle time	5 msec

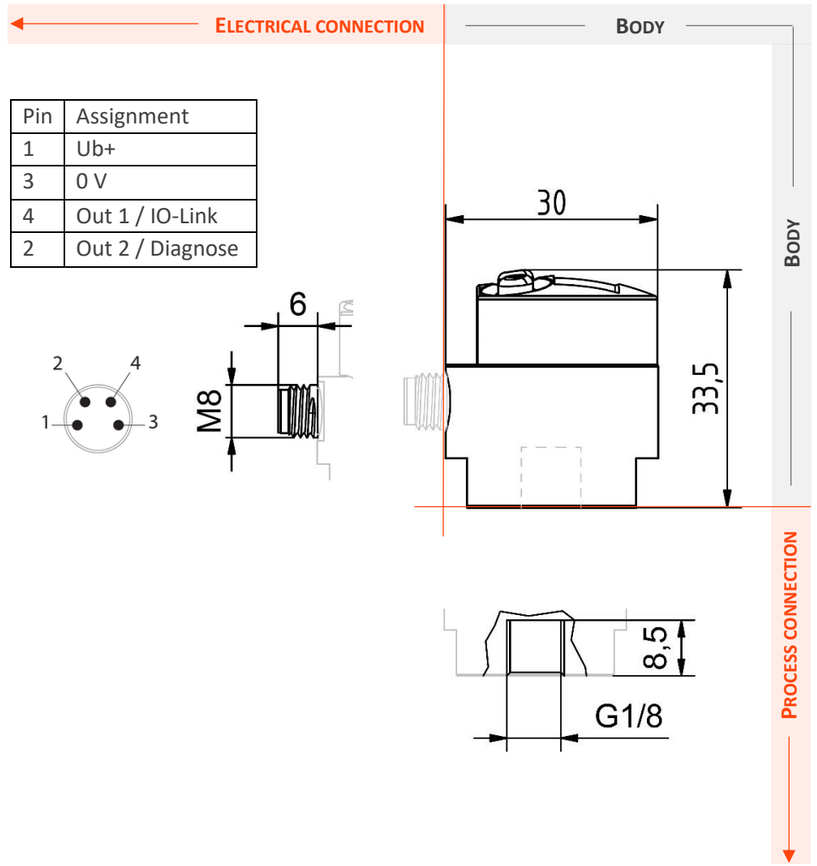

Pin	Assignment
1	Ub+
3	0 V
4	Out 1 / IO-Link
2	Out 2 / Diagnose

Operating conditions

Operating temperature	Operation: -10°…+60°C Storage: -20°…+85°C
EMC / interference immunity	EN61000-6-2
EMC / interference emission	EN61000-6-4

*overpressure not continuously allowed